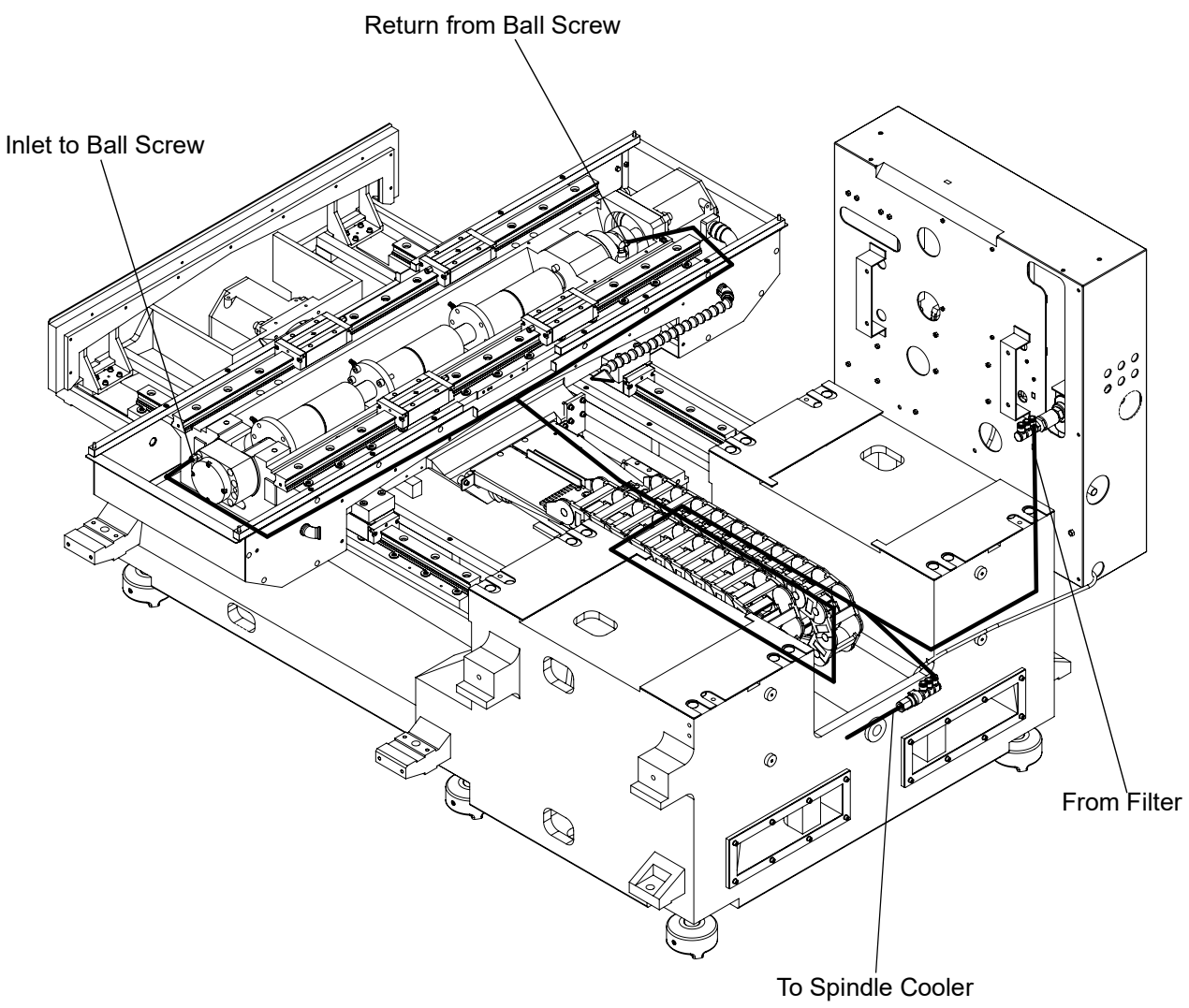
Return from Ball Screw
Inlet to Ball Screw
From Filter
To Spindle Cooler